更改 REV	出图日期 DATE	设变内容 MODIFICATION	修改 DRAWN
A	2024/08/20		

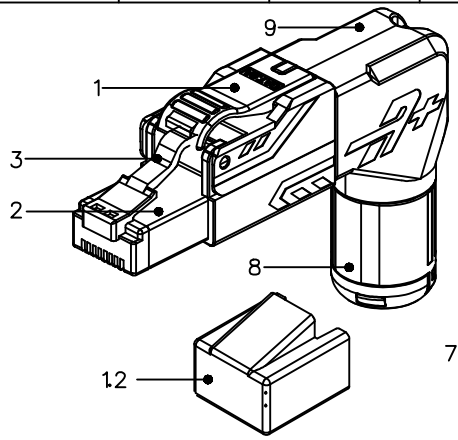

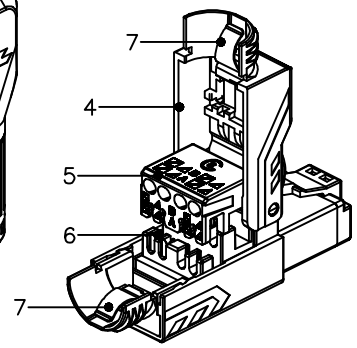

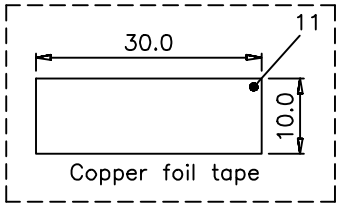

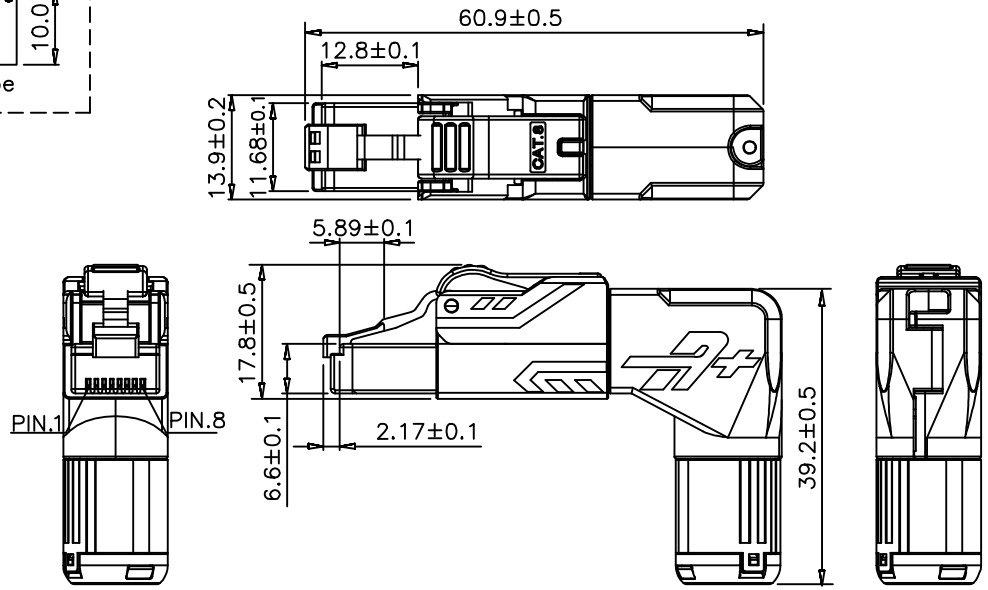

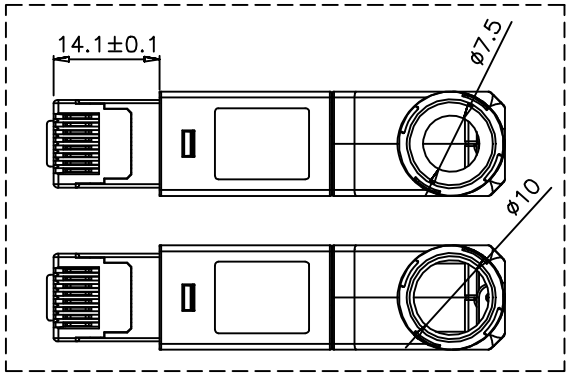

Specification :

Material :

1. Extractor : PC, UL 94-V2, black color.
2. Housing : Zinc die-Casting with nickel plated.
3. RJ45 plug :
   3-1. Housing : PC, UL 94-V2, black color.
   3-2. Contact material : Phosphor bronze with 100 micro-inch nickel plated.
   3-3. Contact finish : Min. 50 micro-inch gold plated on surface contact area.
4. Cover : Zinc die-casting with nickel plated.
5. Wire management bar : PC, UL 94-V2, white color.
6. IDC :
   6-1. Housing : PC, UL 94-V2, white color.
   6-2. Terminal : Copper with tin plated.
7. Grounding contact : Copper with nickel plated.
8. Boot :
   8-1. Housing : Zinc die-casting with nickel plated.
   8-2. SR : PC, UL 94-V2, transparent color.
   8-3. CAP : PC, UL 94-V2, black color.
9. Angle cap : Zinc die-casting with nickel plated.
10. PCB, UL 94-V0.
11. Copper foil tape.
12. Dust cap : PE, black color.

Features & performance :

a. Compliant with the IEC60603-7-1 dimension & reliability requirement.
b. T568A & T568B wiring.
c. Life (Mating cycles): Min. 750 cycles.
d. Mating & un-mating force: Max. 30 N.
e. Retention strength: 7.7 kg between jack & plug.
f. Wire conductor range: Solid and stranded, 22-26 AWG.
g. Cable OD range: 5.5-10.0 mm.
h. IDC re-installing cycles: Min. 20 cycles.
i. Operating temperature: -10°C to+60°C.

Note: The mated plug should compliant with the IEC60603-7-1 requirement.

发布章
Issued
2024.08.20
开发部
R&D

宁波卓新通讯接插件有限公司
NINGBO EXCELLENCE COMMUNICATED CONNECTOR CO.,LTD

DIMENSION IN mm (Inch) TOLERANCE UNLESS OTHERWISE SPECIFIED		材质 MATERIAL: PC	图号 DWG NO.: EXW-FPAS-C8-FS(S02)
.X±0.1	.X°±5°	名称 TITLE: EXW-FPAS-C8-FS(S02)	
.XX±0.05	.XX°±2°		
审核 APPROVAL: Carine	核对 CHECKED: Zach	制图 DRAWN: CathyLi	比例 SCALE: 2/1 · 张数 SHEET: 1/1 · 角法 PROJ. · 更改 REV: A

ST-DR-009A